Actisense®
Award Winning NMEA Specialists

Part Number: A2K-4WT

A2K-4WT

4 Way Multidrop T Piece (Micro)

The Actisense NMEA 2000® 4 Way Multidrop T Piece is for use where a multiple drop or 'ports' are required from the NMEA 2000® backbone to connect other devices.

With five female and one male connector, the A2K-4WT can be easily connected to Actisense NMEA 2000® micro cable assemblies, available in various lengths with UL certified cable for unbeatable quality.

Colour	Pin	Name
Bare/Green	1	Shield
Red	2	NET-S
Black	3	NET-C
White	4	NET-H
Blue	5	NET-L

Female (face view)

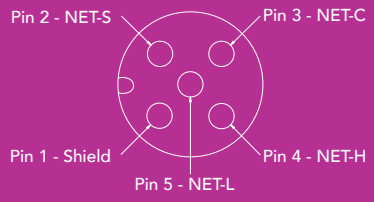

Male (face view)

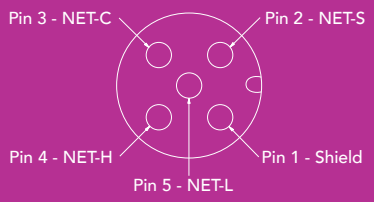

Product Dimensions.

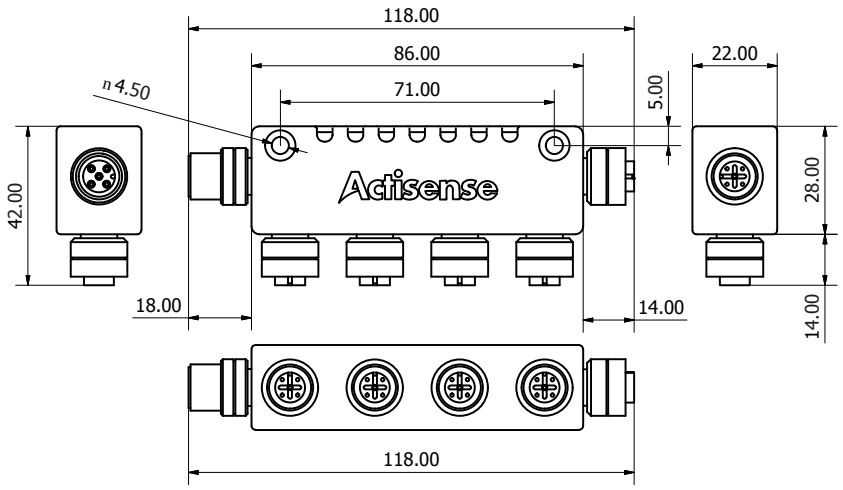

Product Specifications.

Mechanical	
Male Contact	Brass, gold plated
Female Contact	Phosphor bronze, gold plated
Contact Carrier	PBT, black
Contact Polarisation	Standard M12 -"A"- polarisation
Mating Thread	M12
Screw Cap	Brass, nickel plated
O-Ring Seal	Rubber
Housing	TPU, flame retardant to UL94-V0
Weight	105g

Electrical	
Rated Current	4A
Rated Voltage	60V
Approvals and Certifications	
Protection	IP67 (when mated)
Operating Temperature	-20°C to +70°C
Storage Temperature	-40°C to +85°C
NMEA 2000 Certification Pending	
RoHS Compliant	

Actisense®
Unit 5, Wessex Trade Centre
Ringwood Road, Poole, Dorset
UK. BH12 3PF
t: +44 (0)1202 746682
e: sales@actisense.com
www.actisense.com

Active Research Limited is registered in England, Company number: 3295909. VAT Registration number: GB 658 7968 55. **Actisense** from Active Research Limited